Cooking Up a Solution

Same-day testing of dioxins and PCBs for food safety is now feasible

» J.F. Focant and H. Shirkhan

People around world are exposed to chemicals during their lifetime. Among the thousands of existing anthropogenic compounds, some are persistent and remain in the environment for years once generated. The variation in measured levels mainly depends on the fact that some are synthesized as industrial products, while others are released accidentally or as byproducts. Broad ranges of toxicities can be observed. The duality level toxicity usually indicates if measurements of a particular chemical or family of chemicals should be implemented. Polychlorinated dibenzo-*p*-dioxins (PCDDs), polychlorinated dibenzofurans (PCDFs) and polychlorinated biphenyls (PCBs) are the persistent organic chemicals that receive attention because of their toxicity. All together, depending on the position and number of chlorine atoms present in the molecule, they represent more than 400 individual molecules (congeners) that have to be separated from each other to ensure distinctive quantification (Figure 1).

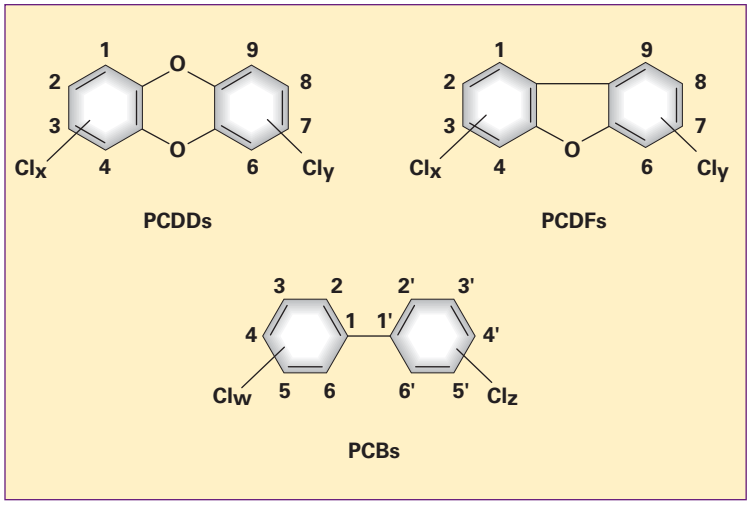

FIGURE 1: Chemical structures of PCDDs, PCDFs and PCBs.

These molecules are lipophilic and can bio-accumulate in the food chain up to humans. Therefore, human exposure can be monitored directly by analysis of adipose tissues or blood lipids in epidemiological studies. However, as 95% of human exposure due to consumption of food of animal origin, stringent regulations have been set for foodstuffs that also have to be screened for dioxin and PCB levels during food safety programs.

Among the 419 possible congeners, a subset of 30 molecules is of prime interest because their chemical structures are such that they bind to a cellular dioxin-specific receptor, enter the nucleus, access the genetic material of the cell and alter gene transcription. Because of the broad range of toxicities observed for this subset, a list of toxic equivalency factors (TEFs), expressing the toxicity of each congener relative to the most toxic one (2,3,7,8-TCDD), has been created to assess the global toxicity (toxic equivalents, or TEQs) of a sample. TEQ values are produced by multiplying each measured congener concentration with its corresponding TEF. All regulatory values are set on a TEQ basis and thus it is mandatory for all analytical procedures to perform isolation and separation of analytes by compound classes, and to further quantify each congener to ensure data reporting on a congener-specific basis.

Sample preparation

Preparing either human or food samples for dioxin and PCB measurement is a task that challenges many research centers and routine laboratories. Accurate measurement of dioxins and related compounds requires high standard analytical strategies, time, extensive know-how and money. One of the major reason is that PCDDs, PCDFs and PCBs are found at levels as low as pico- or femtogram per gram of matrix, depending on the investigated biological samples. Additionally, matrix-related interferences are present in concentrations at orders of magnitude higher than the analytes of interest. For those reasons, a complex

multi-step approach is required to 1) extract the analytes from the matrix core; 2) separate undesirable interferences; and 3) finally isolate, separate and quantify analytes of interest. Those complex multistep strategies include sample extraction, sample cleanup, sample fractionation, several steps of solvent reduction and finally, analyte measurements by GC-MS under strict quality assurance/quality control (QA/QC) criteria. Accredited laboratories often require a week or more for reporting due to the tedious manual multi-step procedures that are mandatory for this ultra-trace analysis (ppt, ppq). In terms of cost per sample and sample throughput, it is not only the final measurement of the analyte concentration, but—maybe even more importantly—the complex sample preparation procedure, which makes this measurement possible. In the past few years, efforts have been focused on the development of alternative procedures to speed up and simplify the process while maintaining a high level of QA/QC.

Several non-instrumental and instrumental automated approaches are available for both extraction and cleanup. Soxhlet extraction and liquid-liquid extraction have long been the most used tools for non-instrumental extraction of solids and liquids, respectively. They have proven to be very efficient, but some limitations encouraged the development of other approaches based on instrumental techniques. Depending on the physico-chemical properties of sample matrices, instrumental techniques are based on solid-phase extraction (SPE), matrix solid-phase dispersion (MSPD), pressurized liquid extraction (PLE), microwave-assisted extraction (MAE) and supercritical fluid extraction (SFE). For the following clean-up step, preparative liquid chromatography (LC) using silica-based sorbents and size-exclusion chromatography (SEC) are the most common techniques to remove most matrix-related interferences. Additionally, because of peak capacity issues in GC and MS fragmentation similarities of target analytes, a fractionation step is required prior measurement. This is performed using additional LC sorbents like Florisil, basic alumina, porous graphitic carbon (PGC) and 2-(1pyrenyl)ethyl (PYE). Those sorbents allows the separation

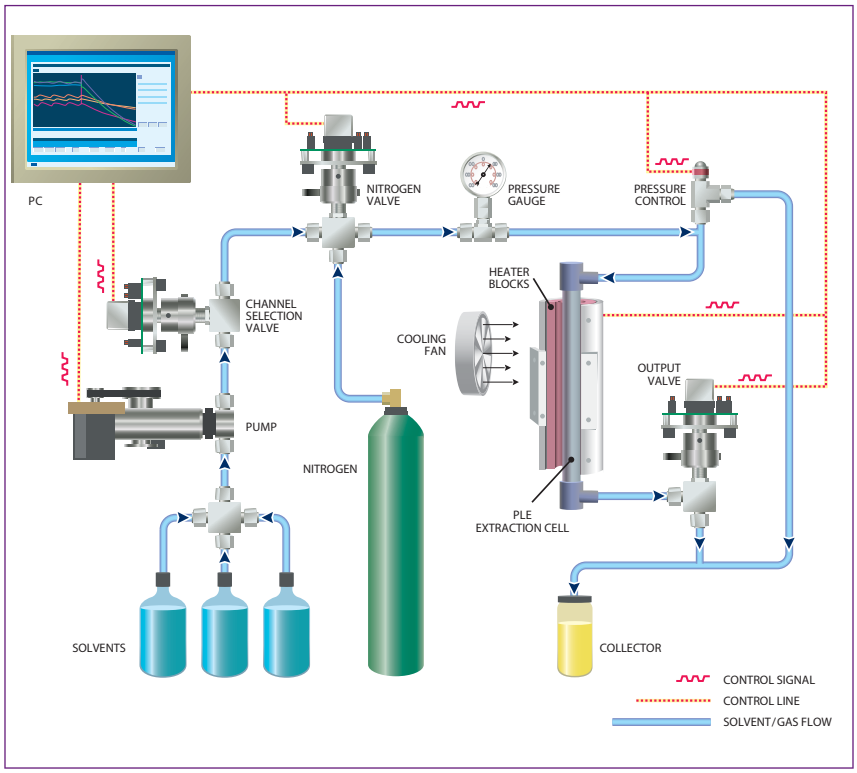

FIGURE 2: PLE schematic.

of the cleaned extract in subgroups of compounds (PCDDs, PCDFs, PCBs) depending on their polarity and geometry. The fractions can then be analyzed separately by GC-MS.

Integrated approach

In order to move towards simplification of the entire sample preparation procedure, coupling and hyphenation of the various analytical steps is required. In that context, an integrated strategy has recently been proposed. It rests on the use of PLE coupled to an automated solvent reduction exchange device that produces sample extracts that can automatically be further cleaned up via a multi-step LC setup. The LC setup includes a multi-layer silica column (acid, neutral, basic), a basic alumina column and a column containing carbon dispersed on celite. The fractionated extracts are further evaporated using the hyphenated solvent reduction exchange device to satisfy to the required concentration factor, and then transferred to GC injection vials for GC-MS measurements.

Highlight of the global procedure

1. Sampling

The first analytical step is the representative sampling of the material to be analyzed. This step is followed by homogenization and sub-sampling, according to the matrix type. The internal standard is added at that level to ensure proper traceability of recovery rates by GC-MS quantification. For high water content samples, a pre-drying step might be performed by oven or freeze drying.

2. Extraction

The solid or semi-solid sample is placed in a stainless-steel extraction cartridge, which is capped on both ends with disposable 'push-in' Teflon caps equipped with metal frits to prevent particulate clogging. An additional drying agent can be placed inside the cartridge to ensure proper final drying prior to extract collection. The extraction cartridge holder can accommodate various cell sizes (5 to 100 mL). Packed cells are manually placed on the cell holder and secured using a rapid-closure device that ensures a leak-free connection. PLE cartridges are pressurized to as high as 3500 psi by the high-pressure pump. Electrical heating of the cartridges is ensured by a surrounding heater block, while cooling after extraction is performed using two cooling fans. The cartridges are then flushed with fresh solvent and purged with

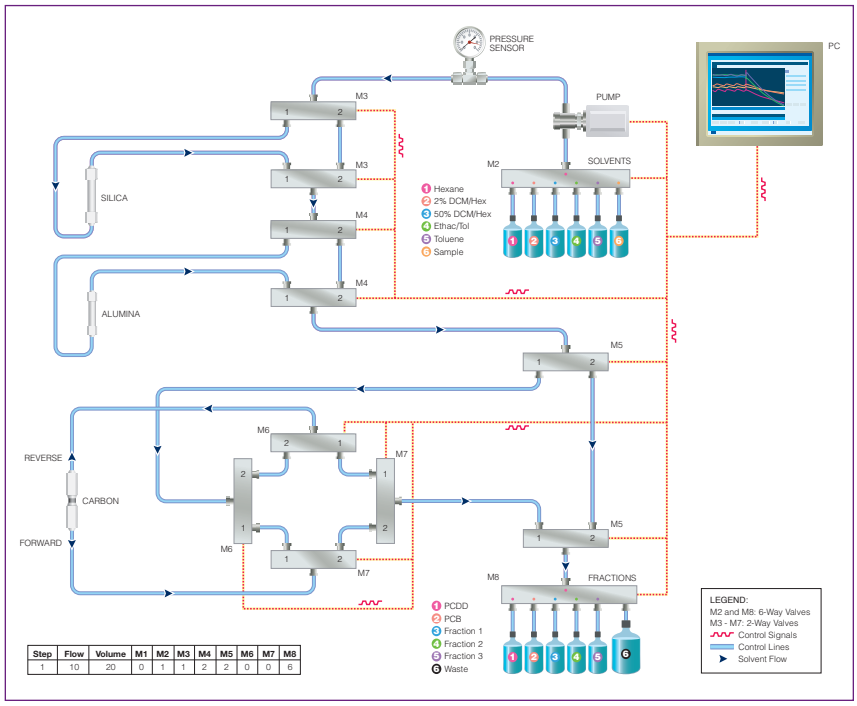

Step	Flow	Volume	M1	M2	M3	M4	M5	M6	M7	M8
1	10	20	0	1	1	2	2	0	0	6

FIGURE 3: Clean-up schematic.

nitrogen to ensure complete transfer of the analytes to the collection tube. Static and continuous extraction also can be carried out, and depending on matrix types, various solvents and solvent mixtures can be used. A schematic of the PLE setup is illustrated in Figure 2. All extraction data (temperature, pressure, etc.) are computer controlled via real-time software and all events are recorded for traceability. Plots of the parameters are further available for automatic documentation and data reporting.

3. First solvent volume reduction and exchange

Depending on the PLE cartridge volume (related to the sample size), and the number of extraction cycles (one to three), extraction solvent volumes can be up to 300 mL. This has to be reduced to around 50 mL to ensure compatibility with the following LC clean-up step that is performed in hexane. If the extraction solvent is hexane, it is only a matter of reducing the solvent volume from 300 mL to 50 mL. This is automatically performed by collecting the extracted mixture in evaporation tubes that are placed in a temperature-controlled water bath and then flushed with a gentle nitrogen flux to speed up the evaporation. The solvent reduction exchange device automatically stops the concentration cycle when the required volume is reached.

If the extraction solvent is not hexane, it can easily be exchanged by removing all the extraction solvent. The desired volume of hexane is then added prior the transfer of the extract to the clean-up columns for purification.

4. Clean-up and fractionation

The schematic of the automated multi-column LC clean-up system is illustrated in Figure 3. A control module pilots valve drive modules connected to the pump, as well as pressure modules responsible for the solvent flow in the valve module. Easy programming and software editing allow for the creation of custom-made sequences of events that drive the required solvent at the right place at the right moment. Clean up takes place at a low pressure (5 to 30 psi) and operates with an independent pump from the PLE system. Classic clean up for PCDD/F and PCB run uses disposable multi-layer silica columns (4 g acid, 2 g base and 1.5 g neutral), basic alumina (8 g) and PX-21 (2 g) carbon columns. These columns are packed in disposable Teflon tubes, manufactured by FMS, are individually sealed in Mylar packaging. All columns are conditioned by the required solvent volumes during the extraction step. As illustrated in Figure 4, the hexane fraction is loaded on the silica column (previously conditioned with 100 mL of hexane at 10 mL/min) at 5 mL/min. After a flush of 100 mL of hexane at 10 mL/min through alumina to the waste (F1), PCDD/Fs and PCBs are eluted from alumina to carbon using 100 mL of hexane-dichloromethane (1:1) at a flow rate of 10 mL/min. The planar species (PCDD/Fs and NO-PCBs) are fixed on the carbon column, although the non-planar species (other PCBs) are collected in F2. Some hexane is added to the carbon column for additional clean up of the planar fraction (F3) and the F4 fraction is collected by back flushing the carbon column with 80 mL of toluene at 5 mL/min to elute the PCDD/Fs and NO-PCBs that are collected in evaporation tubes. At the end of the process, the system is automatically decontaminated via a special solvent program.

5. Second solvent volume reduction and exchange

As soon as the first fractions start to come off the clean up columns, the second concentration cycle starts. Both the hexane-dichloromethane (1:1) and the toluene fractions are concentrated to approximately 150 µL, using the solvent reduction exchange device. The frac-

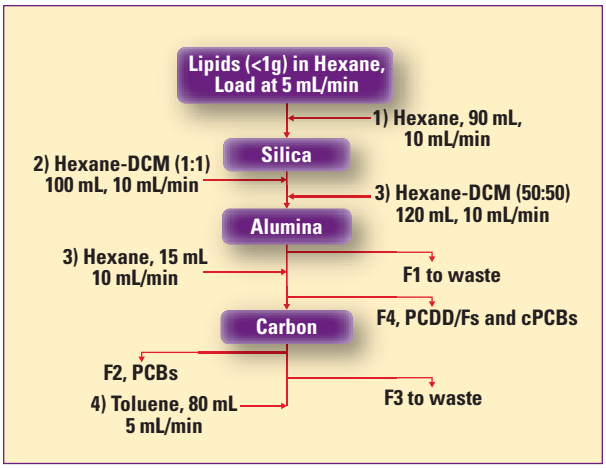

FIGURE 4: Flow chart for the automated clean-up system.

tions are then transferred to GC conical vials containing nonane used as keeper to avoid the loss of analyte. Depending on the fraction, direct GC-MS injection can be carried out, or more time is dedicated to furter evaporate the fractions to ensure compliance with established LOQs. Figure 5 illustrates the complete integrated system.

FIGURE 5: Integrated extraction, evaporation and clean-up system (TRP Total-Rapid-Prep).

Data quality

High QA/QC level is required for dioxin analysis, and laboratories must be accredited. Part of the procedure is to monitor QC charts over time to ensure proper control of the procedure. In Figure 6, some date for QC yolk samples are presented. QC samples from the same batch were analyzed over time with a reference-separated multi-step method, and with an integrated approach. Figure 6 shows the PCDD/F TEQ data versus the assigned value in a QC-type plot showing the 95% confidence interval based on the mean value of ±2SD. None of the new method data fell outside this 95% interval. The same statistical distribution is observed for both techniques and the integrated approach data satisfactorily correlates to the reference method. No differences were observed regarding the extract quality compared to other routinely used extraction and clean-up methods in the laboratory. Practically speaking, a set of five unknown samples and one QC sample can be received in the laboratory at 8:00 AM; extracted, cleaned-up and concentrated by 2:00 PM; GC-MS injected by 4:00 PM; and reported after QA/QC verifications by 5:00 PM.

Conclusion

The integrated sample preparation system is expandable from one to six sample configurations. This modular and flexible design allows laboratories to acquire a one-sample configuration system inexpensively and expand it to a two-, three-, four-, five-, or 6-sample configuration as demand for higher throughput grows. Batches of samples (n=6) can then be processed in parallel so that the sample throughput is significantly improved. The goal is to reach a situation where "same-day testing" can be acheived for a large series of samples. The system is capable of utilizing a wide range of extraction cell sizes, clean-up columns and multiple solvent selection valves. Additionally, it is well suited for new method development and for experimenting with different sample sizes, solvents, clean-up packing materials, extraction pressures and temperatures. Each channel operates independently of other channels; if one channel malfunctions the rest will still work. Any malfunctioning modules can be replaced by the laboratory personnel on site. The large-bore plumbing of the extraction module makes it virtually clog free, and exposed construction makes parts replacement extremely easy.

The development of such a fast "cookbook" procedure has large interest in the food processing industry where testing must be performed as quickly as possible to avoid downtime in production lines. The level of automation and coupling is such that it is now possible to imagine performing the dioxin screening onsite in a regular industrial laboratory that does not have specific "dioxin skills." CT

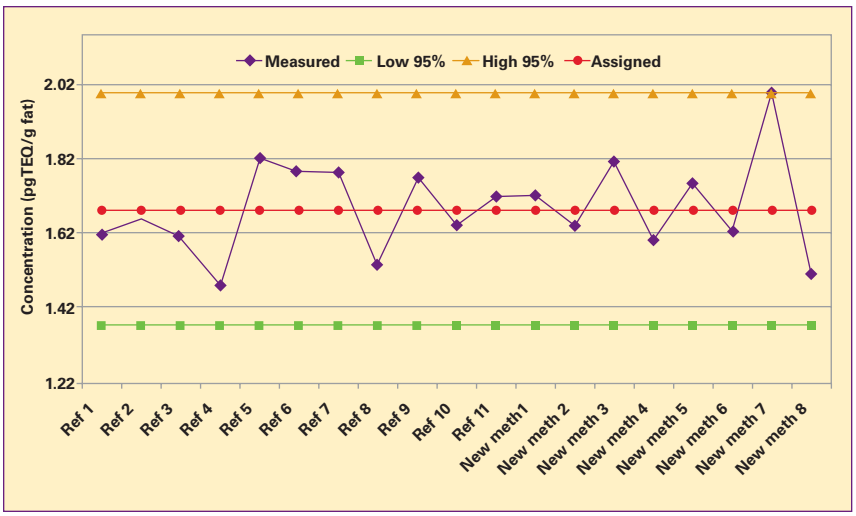

FIGURE 6: QC chart for yolk. Samples prepared using the integrated method.

J.F. Focant represents CART, Organic and Biological Analytical Chemistry, Mass Spectrometry Laboratory, Chemistry Department, University of Liège in Belgium. H. Shirkhan works on behalf of Fluid Management Systems, Inc., Waltham, MA.

Comments? Questions?
Email us at
ChromatographyTechniques@advantagemedia.com!