*Application Note*

# Pesticide Residue Analysis Using Pressurized Liquid Extraction (PLE) for the Analysis of Pesticides in Foods by GC/MS.

## Introduction

In recent years, increased awareness of consumer and food safety has led to a greater demand for screening of various food stuffs. This includes screening for multi residue pesticides. Like most agricultural products, pesticides are widely used for crop management and can find their way into consumer goods. It is therefore important that reliable, rapid and cost effective procedures be in place for the screening of products destined for a consumer market.

Pesticide extractions and analysis have long been in place for the food and environmental industries. Tapping into these methodologies, the usage of Pressurized Liquid Extraction can be fitted to deliver a one step extraction and extract clean-up process for rapid GC/MS analysis of a wide array of pesticides.

## Instrumentation

• FMS, Inc. PLE® extraction system
• Thermo TSQ Quantum Ultra

## Consumables

• FMS 10 mL PLE extraction cells
• FMS Teflon PLE end caps
• Acetonitrile, pesticide grade
• FMS CleanXtract™ Cleanup
• Ottawa Sand
• Nine individual pesticide mixes standards for total of 203 pesticides.
• Internal standard.

## Sample/Reagent Prep

1. Sample aliquots are to be weighed out, thoroughly homogenized.
2. Extraction cells are filled from bottom to top.
3. Cover bottom frit with sufficient Ottawa Sand.
4. Add sample aliquot on top of Sand.
5. Add relevant standard mixes and internal standards.

Figure #1. PLE extraction cell with sample and in-line clean-up.

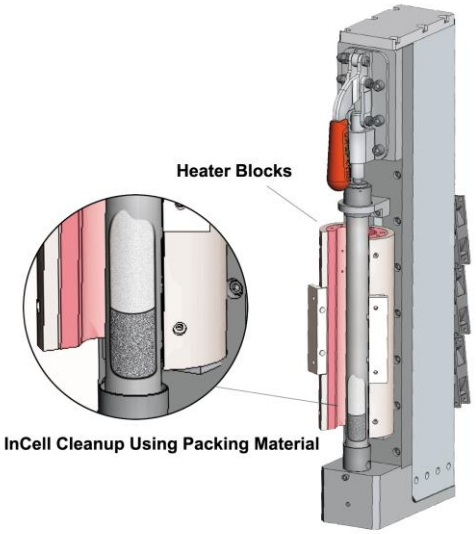


## Sample/Reagent Prep

5. Add FMS CleanXtract™ mix in the cell on top of Sample
6. Add Ottawa Sand if needed to top off cell and place the cell in FMS extraction system.

## PLE Procedure
## Pesticides

1. Cells are filled with Acetonitrile.
2. Cells are pressurized for 5 min. Cells are cooled and depressurized
3. Cells are flushed with Acetonitrile and nitrogen purged of remaining solvent.
4. Final extract is collected and a sample aliquot is transferred to a vial for GC/MS analysis.

## GC/MS Analysis

GC/MS-MS Conditions

Thermo Trace GC w/PTV

TSQ Quantum Ultra

30 meter, .25mm, .25µm Column w/5 meter Guard column

203 Pesticides scanned (414 transitions)

FMS
Fluid Management Systems

## Results Table 1.

| | LCS | | Green Tea | | Black Tea | | Fennel Seed | | Astragulus Root | | Harthorn | | Gota Kola Berry | | Green Coffee | |
|---|---|---|---|---|---|---|---|---|---|---|---|---|---|---|---|---|
| Analyte | amt | rec | amt | rec | amt | rec | amt | rec | amt | rec | amt | rec | amt | rec | amt | rec |
| **Organochlorine Pesticides** | | | | | | | | | | | | | | | | |
| Chlorneb | 0.085 | 85% | 0.095 | 95% | 0.094 | 94% | 0.072 | 72% | 0.084 | 84% | 0.091 | 91% | 0.098 | 98% | 0.084 | 84% |
| Pentachlorobenzene | 0.061 | 61% | 0.066 | 66% | 0.066 | 66% | 0.056 | 56% | 0.049 | 49% | 0.058 | 58% | 0.061 | 61% | 0.054 | 54% |
| HCH-alpha | 0.085 | 85% | 0.083 | 83% | 0.079 | 79% | 0.072 | 72% | 0.075 | 75% | 0.076 | 76% | 0.088 | 88% | 0.085 | 85% |
| Pentachloroanisole | 0.071 | 71% | 0.075 | 75% | 0.08 | 80% | 0.069 | 69% | 0.064 | 64% | 0.072 | 72% | 0.078 | 78% | 0.071 | 71% |
| HCH-beta | 0.076 | 76% | 0.08 | 80% | 0.076 | 76% | 0.064 | 64% | 0.067 | 67% | 0.078 | 78% | 0.092 | 92% | 0.079 | 79% |
| HCH-gamma (Lindane) | 0.075 | 75% | 0.081 | 81% | 0.083 | 83% | 0.067 | 67% | 0.069 | 69% | 0.078 | 78% | 0.077 | 77% | 0.089 | 89% |
| HCH-delta | 0.082 | 82% | 0.078 | 78% | 0.07 | 70% | 0.069 | 69% | 0.069 | 69% | 0.073 | 73% | 0.072 | 72% | 0.081 | 81% |
| Heptachlor | 0.072 | 72% | 0.083 | 83% | 0.084 | 84% | 0.073 | 73% | 0.065 | 65% | 0.075 | 75% | 0.078 | 78% | 0.078 | 78% |
| Pentachlorothioanisole | 0.071 | 71% | 0.075 | 75% | 0.08 | 80% | 0.069 | 69% | 0.064 | 64% | 0.072 | 72% | 0.078 | 78% | 0.071 | 71% |
| Aldrin | 0.065 | 65% | 0.062 | 62% | 0.07 | 70% | 0.054 | 54% | 0.064 | 64% | 0.063 | 63% | 0.08 | 80% | 0.078 | 78% |
| 4,4'-Dichlorobenzophenone | 0.074 | 74% | 0.075 | 75% | 0.079 | 79% | 0.075 | 75% | 0.063 | 63% | 0.076 | 76% | 0.078 | 78% | 0.079 | 79% |
| Fenson | 0.066 | 66% | 0.071 | 71% | 0.066 | 66% | 0.073 | 73% | 0.065 | 65% | 0.069 | 69% | 0.063 | 63% | 0.067 | 67% |
| Isodrin | 0.106 | 106% | 0.079 | 79% | 0.11 | 110% | 0.115 | 115% | 0.058 | 58% | 0.12 | 120% | 0.082 | 82% | 0.089 | 89% |
| Heptachlor epoxide (isomer B) | 0.053 | 53% | 0.082 | 82% | 0.099 | 99% | 0.054 | 54% | 0.069 | 69% | 0.097 | 97% | 0.091 | 91% | 0.048 | 48% |
| Chlorbenside | 0.07 | 70% | 0.07 | 70% | 0.064 | 64% | 0.066 | 66% | 0.052 | 52% | 0.069 | 69% | 0.063 | 63% | 0.07 | 70% |
| trans-Chlordane | 0.045 | 45% | 0.054 | 54% | 0.05 | 50% | 0.041 | 41% | 0.038 | 38% | 0.049 | 49% | 0.049 | 49% | 0.048 | 48% |
| 2,4'-DDE | 0.072 | 72% | 0.078 | 78% | 0.082 | 82% | 0.088 | 88% | 0.073 | 73% | 0.087 | 87% | 0.083 | 83% | 0.078 | 78% |
| Endosulfan I | 0.08 | 80% | 0.097 | 97% | 0.097 | 97% | 0.115 | 115% | 0.078 | 78% | 0.132 | 132% | 0.111 | 111% | 0.097 | 97% |
| cis-Chlordane | 0.076 | 76% | 0.077 | 77% | 0.081 | 81% | 0.101 | 101% | 0.077 | 77% | 0.096 | 96% | 0.081 | 81% | 0.072 | 72% |
| trans-Nonachlor | 0.093 | 93% | 0.085 | 85% | 0.088 | 88% | 0.097 | 97% | 0.071 | 71% | 0.103 | 103% | 0.081 | 81% | 0.082 | 82% |
| Chlorfenson (Ovex) | 0.063 | 63% | 0.073 | 73% | 0.077 | 77% | 0.1 | 100% | 0.065 | 65% | 0.078 | 78% | 0.072 | 72% | 0.074 | 74% |
| Dieldrin | 0.088 | 88% | 0.127 | 127% | 0.1 | 100% | 0.103 | 103% | 0.091 | 91% | 0.089 | 89% | 0.138 | 138% | 0.097 | 97% |
| 4,4'-DDE | 0.062 | 62% | 0.078 | 78% | 0.085 | 85% | 0.088 | 88% | 0.068 | 68% | 0.084 | 84% | 0.068 | 68% | 0.075 | 75% |
| 2,4'DDD | 0.086 | 86% | 0.079 | 79% | 0.089 | 89% | 0.058 | 58% | 0.074 | 74% | 0.069 | 69% | 0.113 | 113% | 0.079 | 79% |
| Endrin | 0.073 | 73% | 0.085 | 85% | 0.085 | 85% | 0.177 | 177% | 0.095 | 95% | 0.086 | 86% | 0.204 | 204% | 0.159 | 159% |
| Ethylan (Perthane) | 0.076 | 76% | 0.073 | 73% | 0.075 | 75% | 0.095 | 95% | 0.072 | 72% | 0.084 | 84% | 0.078 | 78% | 0.078 | 78% |
| Endosulfan II | 0.082 | 82% | 0.083 | 83% | 0.086 | 86% | 0.052 | 52% | 0.07 | 70% | 0.071 | 71% | 0.097 | 97% | 0.078 | 78% |
| 4,4'-DDD | 0.086 | 86% | 0.081 | 81% | 0.093 | 93% | 0.049 | 49% | 0.072 | 72% | 0.069 | 69% | 0.103 | 103% | 0.075 | 75% |
| 2,4'-DDT | 0.085 | 85% | 0.083 | 83% | 0.085 | 85% | 0.072 | 72% | 0.075 | 75% | 0.063 | 63% | 0.11 | 110% | 0.078 | 78% |
| cis-Nonachlor | 0.071 | 71% | 0.064 | 64% | 0.076 | 76% | 0.044 | 44% | 0.062 | 62% | 0.054 | 54% | 0.096 | 96% | 0.062 | 62% |
| 4,4'-Methoxychlor olefin | 0.087 | 87% | 0.102 | 102% | 0.097 | 97% | 0.062 | 62% | 0.084 | 84% | 0.073 | 73% | 0.11 | 110% | 0.079 | 79% |
| 4,4'-DDT | 0.086 | 86% | 0.091 | 91% | 0.094 | 94% | 0.058 | 58% | 0.085 | 85% | 0.078 | 78% | 0.12 | 120% | 0.086 | 86% |
| 2,4'-Methoxchlor | 0.096 | 96% | 0.097 | 97% | 0.096 | 96% | 0.07 | 70% | 0.095 | 95% | 0.087 | 87% | 0.132 | 132% | 0.111 | 111% |
| Mirex | 0.081 | 81% | 0.079 | 79% | 0.087 | 87% | 0.079 | 79% | 0.066 | 66% | 0.06 | 60% | 0.102 | 102% | 0.073 | 73% |
| **Organonitrogen Pesticides** | | | | | | | | | | | | | | | | |
| 2,6-Dichlorobenzonitrile | 0.073 | 73% | 0.077 | 77% | 0.081 | 81% | 0.067 | 67% | 0.068 | 68% | 0.068 | 8% | 0.077 | 77% | 0.073 | 73% |
| Biphenyl | 0.068 | 68% | 0.072 | 72% | 0.079 | 79% | 0.06 | 60% | 0.065 | 65% | 0.062 | 62% | 0.08 | 80% | 0.075 | 75% |
| 3,4-Dichloroaniline | 0.066 | 66% | 0.073 | 73% | 0.073 | 73% | 0.064 | 64% | 0.067 | 67% | 0.067 | 67% | 0.07 | 70% | 0.067 | 67% |
| Tetrachloronitrobenzene (Tecnazene) | 0.072 | 72% | 0.059 | 59% | 0.064 | 64% | 0.051 | 51% | 0.055 | 55% | 0.059 | 59% | 0.064 | 64% | 0.049 | 49% |
| THPI (Tetrahydrophthalimide) | 0.117 | 117% | 0.128 | 128% | 0.106 | 106% | 0.102 | 102% | 0.106 | 106% | 0.1 | 100% | 0.125 | 125% | 0.121 | 121% |
| Diphenylamine | 0.072 | 72% | 0.078 | 78% | 0.075 | 75% | 0.071 | 71% | 0.076 | 76% | 0.073 | 73% | 0.091 | 91% | 0.078 | 78% |
| 2,3,5,6-Tetrachloroaniline | 0.084 | 84% | 0.091 | 91% | 0.086 | 86% | 0.083 | 83% | 0.085 | 85% | 0.09 | 90% | 0.101 | 101% | 0.088 | 88% |
| Pebulate | 0.074 | 74% | 0.075 | 75% | 0.083 | 83% | 0.079 | 79% | 0.074 | 74% | 0.071 | 71% | 0.079 | 79% | 0.07 | 70% |
| N-(2,4-Dimethylphenyl)formamide | 0.089 | 89% | 0.089 | 89% | 0.087 | 87% | 0.09 | 90% | 0.078 | 78% | 0.084 | 84% | 0.088 | 88% | 0.088 | 88% |
| Propachlor | 0.096 | 96% | 0.107 | 107% | 0.132 | 132% | 0.1 | 100% | 0.108 | 108% | 0.103 | 103% | 0.115 | 115% | 0.106 | 106% |
| Cycloate | 0.079 | 79% | 0.087 | 87% | 0.093 | 93% | 0.077 | 77% | 0.083 | 83% | 0.083 | 83% | 0.094 | 94% | 0.08 | 80% |
| cis-Diallate | 0.062 | 62% | 0.081 | 81% | 0.081 | 81% | 0.064 | 64% | 0.068 | 68% | 0.067 | 67% | 0.095 | 95% | 0.073 | 73% |
| trans-Diallate | 0.069 | 69% | 0.072 | 72% | 0.081 | 81% | 0.074 | 74% | 0.073 | 73% | 0.056 | 56% | 0.071 | 71% | 0.063 | 63% |
| Propyzamide | 0.081 | 81% | 0.092 | 92% | 0.099 | 99% | 0.083 | 83% | 0.08 | 80% | 0.071 | 71% | 0.09 | 90% | 0.079 | 79% |
| Triallate | 0.078 | 78% | 0.083 | 83% | 0.091 | 91% | 0.074 | 74% | 0.074 | 74% | 0.081 | 81% | 0.087 | 87% | 0.077 | 77% |
| Dimethachlor | 0.09 | 90% | 0.097 | 97% | 0.097 | 97% | 0.089 | 89% | 0.086 | 86% | 0.11 | 110% | 0.106 | 106% | 0.101 | 101% |
| Propanil | 0.069 | 69% | 0.099 | 99% | 0.071 | 71% | 0.067 | 67% | 0.069 | 69% | 0.067 | 67% | 0.067 | 67% | 0.108 | 108% |
| Acetochlor | 0.074 | 74% | 0.088 | % | 0.085 | 85% | 0.086 | 86% | 0.074 | 74% | 0.088 | 88% | 0.103 | 103% | 0.063 | 63% |
| Alachlor | 0.088 | 88% | 0.076 | 76% | 0.089 | 89% | 0.082 | 82% | 0.08 | 80% | 0.078 | 78% | 0.095 | 95% | 0.077 | 77% |
| Propisochlor | 0.092 | 92% | 0.122 | 122% | 0.096 | 96% | 0.08 | 80% | 0.093 | 93% | 0.103 | 103% | 0.125 | 125% | 0.097 | 97% |
| Linuron | 0.082 | 82% | 0.103 | 103% | 0.101 | 101% | 0.104 | 104% | 0.079 | 79% | 0.102 | 102% | 0.124 | 124% | 0.113 | 113% |
| Metolachlor | 0.09 | 90% | 0.1 | 100% | 0.099 | 99% | 0.134 | 134% | 0.112 | 112% | 0.1 | 100% | 0.106 | 106% | 0.112 | 112% |
| Diphenamid | 0.071 | 71% | 0.082 | 82% | 0.082 | 82% | 0.097 | 97% | 0.071 | 71% | 0.084 | 84% | 0.094 | 94% | 0.085 | 85% |
| Flutolanil | 0.089 | 89% | 0.089 | 89% | 0.085 | 85% | 0.228 | 228% | 0.111 | 111% | 0.156 | 156% | 0.1 | 100% | 0.109 | 109% |
| Pretilachlor | 0.067 | 67% | 0.077 | 77% | 0.066 | 66% | 0.126 | 126% | 0.085 | 85% | 0.101 | 101% | 0.068 | 68% | 0.024 | 24% |
| Oxadiazon | 0.067 | 67% | 0.064 | 64% | 0.061 | 61% | 0.1 | 100% | 0.065 | 65% | 0.074 | 74% | 0.07 | 70% | 0.071 | 71% |
| Norflurazon | 0.096 | 96% | 0.101 | 101% | 0.079 | 79% | 0.085 | 85% | 0.088 | 88% | 0.09 | 90% | 0.12 | 120% | 0.082 | 82% |
| Methoxychlor | 0.096 | 96% | 0.097 | 97% | 0.096 | 96% | 0.07 | 70% | 0.095 | 95% | 0.087 | 87% | 0.132 | 132% | 0.111 | 111% |
| Fenpropathrin | 0.072 | 72% | 0.093 | 93% | 0.077 | 77% | 0.052 | 52% | 0.074 | 74% | 0.059 | 59% | 0.124 | 124% | 0.099 | 99% |
| Pyridaben | 0.073 | 73% | 0.048 | 48% | 0.08 | 80% | 0.055 | 55% | 0.06 | 60% | 0.063 | 63% | 0.062 | 62% | 0.104 | 104% |
| Fluquinconazole | 0.082 | 82% | 0.085 | 85% | 0.089 | 89% | 0.055 | 55% | 0.076 | 76% | 0.065 | 65% | 0.095 | 95% | 0.082 | 82% |
| Etridiazole | 0.088 | 88% | 0.082 | 82% | 0.089 | 89% | 0.075 | 75% | 0.088 | 88% | 0.086 | 86% | 0.105 | 105% | 0.085 | 85% |
| Attrazine | 0.103 | 103% | 0.093 | 93% | 0.095 | 95% | 0.095 | 95% | 0.066 | 66% | 0.094 | 94% | 0.082 | 82% | 0.084 | 84% |
| Terbuthylazine | 0.073 | 73% | 0.102 | 102% | 0.072 | 72% | 0.093 | 93% | 0.092 | 92% | 0.11 | 110% | 0.072 | 72% | 0.085 | 85% |
| Terbacil | 0.105 | 105% | 0.108 | 108% | 0.068 | 68% | 0.094 | 94% | 0.11 | 110% | 0.084 | 84% | 0.113 | 113% | 0.13 | 130% |
| Vinclozolin | 0.078 | 78% | 0.077 | 77% | 0.103 | 103% | 0.086 | 86% | 0.08 | 80% | 0.078 | 78% | 0.092 | 92% | 0.084 | 84% |
| Triadimefon | 0.117 | 117% | 0.135 | 135% | 0.087 | 87% | 0.161 | 161% | 0.15 | 150% | 0.15 | 150% | 0.081 | 81% | 0.103 | 103% |

## Results Table 1 (continued).

| | LCS | | Green Tea | | Black Tea | | Fennel Seed | | Astragulus Root | | Harthorn | | Gota Kola Berry | | Green Coffee | |
|---|---|---|---|---|---|---|---|---|---|---|---|---|---|---|---|---|
| Analyte | amt | rec | amt | rec | amt | rec | amt | rec | amt | rec | amt | rec | amt | rec | amt | rec |
| **Organonitrogen Pesticides** | | | | | | | | | | | | | | | | |
| MGK-264 I | 0.064 | 64% | 0.064 | 64% | 0.063 | 63% | 0.073 | 73% | 0.057 | 57% | 0.053 | 53% | 0.065 | 65% | 0.067 | 67% |
| MGK-264 II | 0.059 | 59% | 0.057 | 57% | 0.047 | 47% | 0.068 | 68% | 0.039 | 39% | 0.059 | 59% | 0.031 | 31% | 0.055 | 55% |
| MGK-264* | 0.0615 | 62% | 0.0605 | 61% | 0.055 | 55% | 0.0705 | 71% | 0.048 | 48% | 0.056 | 56% | 0.048 | 48% | 0.061 | 61% |
| Penconazole | 0.12 | 120% | 0.131 | 131% | 0.148 | 148% | 0.192 | 192% | 0.137 | 137% | 0.18 | 180% | 0.121 | 121% | 0.134 | 134% |
| Triadimenol | 0.075 | 75% | 0.085 | 85% | 0.075 | 75% | 0.12 | 120% | 0.076 | 76% | 0.166 | 166% | 0.144 | 144% | 0.086 | 86% |
| Fipronil | 0.055 | 55% | 0.086 | 86% | 0.089 | 89% | 0.085 | 85% | 0.07 | 70% | 0.104 | 104% | 0.076 | 76% | 0.081 | 81% |
| Procymidone | 0.054 | 54% | 0.071 | 71% | 0.067 | 67% | 0.073 | 73% | 0.076 | 76% | 0.071 | 71% | 0.091 | 91% | 0.068 | 68% |
| Lenacil | 0.098 | 98% | 0.108 | 108% | 0.118 | 118% | 0.107 | 107% | 0.109 | 109% | 0.099 | 99% | 0.132 | 132% | 0.099 | 99% |
| Tebuconazole | 0.051 | 51% | 0.092 | 92% | 0.084 | 84% | 0.073 | 73% | 0.079 | 79% | 0.119 | 119% | 0.103 | 103% | 0.082 | 82% |
| Hexazinone (Velpar) | 0.083 | 83% | 0.092 | 92% | 0.093 | 93% | 0.076 | 76% | 0.08 | 80% | 0.078 | 78% | 0.093 | 93% | 0.052 | 52% |
| Iprodione | 0.107 | 107% | 0.083 | 83% | 0.092 | 92% | 0.083 | 83% | 0.098 | 98% | 0.092 | 92% | 0.119 | 119% | 0.064 | 64% |
| Pyripoxyfen | 0.082 | 82% | 0.083 | 83% | 0.102 | 102% | 0.068 | 68% | 0.08 | 80% | 0.078 | 78% | 0.104 | 104% | 0.078 | 78% |
| **Synthetic Pyrethroid Pesticides** | | | | | | | | | | | | | | | | |
| Telfluthrin | 0.074 | 74% | 0.074 | 74% | 0.081 | 81% | 0.073 | 73% | 0.075 | 75% | 0.071 | 71% | 0.079 | 79% | 0.08 | 80% |
| Transfluthrin | 0.091 | 91% | 0.093 | 93% | 0.1 | 100% | 0.065 | 65% | 0.07 | 70% | 0.082 | 82% | 0.095 | 95% | 0.08 | 80% |
| Anthraquinone | 0.001 | 1% | 0.002 | 2% | 0.001 | 1% | 0.003 | 3% | 0.002 | 2% | 0.001 | 1% | 0 | 0% | 0 | 0% |
| Bioallethrin | 0.1 | 100% | 0.123 | 123% | 0.088 | 88% | 0.151 | 151% | 0.103 | 103% | 0.144 | 144% | 0.084 | 84% | 0.085 | 85% |
| Resmethrin (trans) | 0.101 | 101% | 0.091 | 91% | 0.105 | 105% | 0.066 | 66% | 0.074 | 74% | 0.072 | 72% | 0.096 | 96% | 0.085 | 85% |
| Tetramethrin I | 0.062 | 62% | 0.075 | 75% | 0.064 | 64% | 0.05 | 50% | 0.046 | 46% | 0.056 | 56% | 0.158 | 158% | 0.054 | 54% |
| Tetramethrin II | 0.045 | 45% | 0.059 | 59% | 0.046 | 46% | 0.059 | 59% | 0.053 | 53% | 0.061 | 61% | 0.048 | 48% | 0.041 | 41% |
| Tetramethrin* | 0.0535 | 54% | 0.067 | 67% | 0.055 | 55% | 0.0545 | 55% | 0.0495 | 50% | 0.0585 | 59% | 0.103 | 103% | 0.0475 | 48% |
| Bifenthrin | 0.084 | 84% | 0.08 | 80% | 0.084 | 84% | 0.058 | 58% | 0.082 | 82% | 0.071 | 71% | 0.109 | 109% | 0.092 | 92% |
| cis-Phenothrin | 0.067 | 67% | 0.09 | 90% | 0.078 | 78% | 0.05 | 50% | 0.078 | 78% | 0.073 | 73% | 0.095 | 95% | 0.076 | 76% |
| trans-Phenothrin | 0.071 | 71% | 0.083 | 83% | 0.142 | 142% | 0.079 | 79% | 0.082 | 82% | 0.074 | 74% | 0.101 | 101% | 0.09 | 90% |
| lambda-Cyhalothrin | 0.084 | 84% | 0.079 | 79% | 0.082 | 82% | 0.055 | 55% | 0.081 | 81% | 0.067 | 67% | 0.105 | 105% | 0.078 | 78% |
| Acinathrin | 0.07 | 70% | 0.071 | 71% | 0.073 | 73% | 0.057 | 57% | 0.071 | 71% | 0.071 | 71% | 0.078 | 78% | 0.068 | 68% |
| cis-Permethrin | 0.085 | 85% | 0.081 | 81% | 0.087 | 87% | 0.059 | 59% | 0.077 | 77% | 0.067 | 67% | 0.104 | 104% | 0.082 | 82% |
| trans-Permethrin | 0.095 | 95% | 0.093 | 93% | 0.089 | 89% | 0.061 | 61% | 0.081 | 81% | 0.085 | 85% | 0.127 | 127% | 0.094 | 94% |
| Cyfluthrin* | 0.086 | 86% | 0.082 | 82% | 0.085 | 85% | 0.051 | 51% | 0.071 | 71% | 0.073 | 73% | 0.108 | 108% | 0.085 | 85% |
| Cypermethrin* | 0.070 | 70% | 0.076 | 76% | 0.085 | 85% | 0.063 | 63% | 0.076 | 76% | 0.068 | 68% | 0.115 | 115% | 0.089 | 89% |
| Flucythrinate I | 0.079 | 79% | 0.081 | 81% | 0.089 | 89% | 0.049 | 49% | 0.073 | 73% | 0.0748 | 75% | 0.11 | 110% | 0.084 | 84% |
| Flucythrinate II | 0.097 | 97% | 0.094 | 94% | 0.088 | 88% | 0.061 | 61% | 0.093 | 93% | 0.084 | 84% | 0.137 | 137% | 0.106 | 106% |
| Fenvalerate R | 0.083 | 83% | 0.084 | 84% | 0.081 | 81% | 0.061 | 61% | 0.08 | 80% | 0.067 | 67% | 0.096 | 96% | 0.072 | 72% |
| Fenvalerate S | 0.086 | 86% | 0.088 | 88% | 0.091 | 91% | 0.055 | 55% | 0.085 | 85% | 0.063 | 63% | 0.119 | 119% | 0.075 | 75% |
| **Methylated Herbicides** | | | | | | | | | | | | | | | | |
| 2-Phenylphenol | 0.08 | 80% | 0.086 | 86% | 0.101 | 101% | 0.083 | 83% | 0.087 | 87% | 0.084 | 84% | 0.093 | 93% | 0.088 | 88% |
| Chlorpropham | 0.084 | 84% | 0.122 | 122% | 0.1 | 100% | 0.111 | 111% | 0.094 | 94% | 0.118 | 118% | 0.111 | 111% | 0.109 | 109% |
| Metalaxyl | 0.06 | 60% | 0.044 | 44% | 0.078 | 78% | 0.069 | 69% | 0.095 | 95% | 0.077 | 77% | 0.076 | 76% | 0.087 | 87% |
| DCPA methyl ester (Chlorthal-dimethyl) | 0.072 | 72% | 0.075 | 75% | 0.092 | 92% | 0.079 | 79% | 0.07 | 70% | 0.078 | 78% | 0.079 | 79% | 0.081 | 81% |
| Chlozolinate | 0.126 | 126% | 0.109 | 109% | 0.124 | 124% | 0.105 | 105% | 0.092 | 92% | 0.095 | 95% | 0.095 | 95% | 0.129 | 129% |
| Fluzifop-p-butyl | 0.057 | 57% | 0.063 | 63% | 0.07 | 70% | 0.126 | 126% | 0.073 | 73% | 0.098 | 98% | 0.072 | 72% | 0.094 | 94% |
| Bromopropylate | 0.084 | 84% | 0.082 | 82% | 0.085 | 85% | 0.109 | 109% | 0.09 | 90% | 0.103 | 103% | 0.094 | 94% | 0.1 | 100% |
| **Organophosphorus Pesticides** | | | | | | | | | | | | | | | | |
| Methacrifos | 0.068 | 68% | 0.085 | 85% | 0.091 | 91% | 0.076 | 76% | 0.081 | 81% | 0.081 | 81% | 0.086 | 86% | 0.086 | 86% |
| Sulfotepp | 0.075 | 75% | 0.069 | 69% | 0.083 | 83% | 0.071 | 71% | 0.076 | 76% | 0.078 | 78% | 0.087 | 87% | 0.088 | 88% |
| Terbufos | 0.065 | 65% | 0.068 | 68% | 0.075 | 75% | 0.075 | 75% | 0.081 | 81% | 0.083 | 83% | 0.106 | 106% | 0.091 | 91% |
| Tolclofos-methyl | 0.076 | 76% | 0.082 | 82% | 0.085 | 85% | 0.086 | 86% | 0.076 | 76% | 0.073 | 73% | 0.086 | 86% | 0.082 | 82% |
| Fenchlorphos (Ronnel) | 0.075 | 75% | 0.081 | 81% | 0.085 | 85% | 0.076 | 76% | 0.076 | 76% | 0.087 | 87% | 0.082 | 82% | 0.094 | 94% |
| Malathion | 0.08 | 80% | 0.098 | 98% | 0.084 | 84% | 0.107 | 107% | 0.106 | 106% | 0.112 | 112% | 0.119 | 119% | 0.111 | 111% |
| Fenthion | 0.072 | 72% | 0.093 | 93% | 0.097 | 97% | 0.109 | 109% | 0.093 | 93% | 0.094 | 94% | 0.087 | 87% | 0.087 | 87% |
| Bromophos methyl | 0.076 | 76% | 0.08 | 80% | 0.093 | 93% | 0.099 | 99% | 0.093 | 93% | 0.094 | 94% | 0.07 | 70% | 0.085 | 85% |
| Chlorfenvinphos (trans) | 0.06 | 60% | 0.106 | 106% | 0.083 | 83% | 0.129 | 129% | 0.107 | 107% | 0.123 | 123% | 0.093 | 93% | 0.081 | 81% |
| Bromophos ethyl | 0.06 | 60% | 0.07 | 70% | 0.077 | 77% | 0.112 | 112% | 0.082 | 82% | 0.106 | 106% | 0.08 | 80% | 0.077 | 77% |
| Iodofenphos | 0.08 | 80% | 0.082 | 82% | 0.06 | 60% | 0.126 | 126% | 0.066 | 66% | 0.1 | 100% | 0.071 | 71% | 0.08 | 80% |
| Ethion | 0.09 | 90% | 0.092 | 92% | 0.081 | 81% | 0.072 | 72% | 0.076 | 76% | 0.086 | 86% | 0.127 | 127% | 0.093 | 93% |
| Chlorthiophos I | 0.057 | 57% | 0.088 | 88% | 0.066 | 66% | 0.1 | 100% | 0.061 | 61% | 0.085 | 85% | 0.085 | 85% | 0.118 | 118% |
| Chlorthiophos II | 0.07 | 70% | 0.059 | 59% | 0.041 | 41% | 0.111 | 111% | 0.063 | 63% | 0.069 | 69% | 0.077 | 77% | 0.07 | 70% |
| Chlorthiophos III | 0.062 | 62% | 0.077 | 77% | 0.08 | 80% | 0.122 | 122% | 0.076 | 76% | 0.101 | 101% | 0.061 | 61% | 0.073 | 73% |
| Chlorthiophos* | 0.063 | 63% | 0.075 | 75% | 0.062 | 62% | 0.111 | 111% | 0.067 | 67% | 0.085 | 85% | 0.074 | 74% | 0.087 | 87% |
| Sulprofos | 0.065 | 65% | 0.065 | 65% | 0.068 | 68% | 0.107 | 107% | 0.073 | 73% | 0.1 | 100% | 0.078 | 78% | 0.096 | 96% |
| Phorate | 0.076 | 76% | 0.066 | 66% | 0.086 | 86% | 0.072 | 72% | 0.076 | 76% | 0.079 | 79% | 0.094 | 94% | 0.066 | 66% |
| Fonofos | 0.06 | 60% | 0.068 | 68% | 0.08 | 80% | 0.074 | 74% | 0.08 | 80% | 0.077 | 77% | 0.096 | 96% | 0.087 | 87% |
| Disulfoton | 0.074 | 74% | 0.091 | 91% | 0.094 | 94% | 0.088 | 88% | 0.084 | 84% | 0.088 | 88% | 0.095 | 95% | 0.1 | 100% |
| Piperonyl butoxide | 0.068 | 68% | 0.071 | 71% | 0.076 | 76% | 0.063 | 63% | 0.074 | 74% | 0.07 | 70% | 0.095 | 95% | 0.069 | 69% |
| Diazinon | 0.063 | 63% | 0.11 | 110% | 0.105 | 105% | 0.08 | 80% | 0.119 | 119% | 0.113 | 113% | 0.112 | 112% | 0.113 | 113% |
| Isazophos | 0.079 | 79% | 0.093 | 93% | 0.089 | 89% | 0.085 | 85% | 0.083 | 83% | 0.095 | 95% | 0.085 | 85% | 0.081 | 81% |
| Chlorpyrifos methyl | 0.097 | 97% | 0.08 | 80% | 0.085 | 85% | 0.084 | 84% | 0.069 | 69% | 0.076 | 76% | 0.083 | 83% | 0.081 | 81% |
| Pirimiphos methyl | 0.099 | 99% | 0.106 | 106% | 0.096 | 96% | 0.108 | 108% | 0.081 | 81% | 0.122 | 122% | 0.12 | 120% | 0.132 | 132% |
| Chlorpyrifos | 0.075 | 75% | 0.07 | 70% | 0.079 | 79% | 0.083 | 83% | 0.073 | 73% | 0.066 | 66% | 0.079 | 79% | 0.085 | 85% |
| Quinalphos | 0.079 | 79% | 0.083 | 83% | 0.061 | 61% | 0.101 | 101% | 0.076 | 76% | 0.097 | 97% | 0.07 | 70% | 0.075 | 75% |
| Phosmet | 0.08 | 80% | 0.072 | 72% | 0.076 | 76% | 0.061 | 61% | 0.072 | 72% | 0.061 | 61% | 0.101 | 101% | 0.075 | 75% |
| Azinphos methyl | 0.064 | 64% | 0.079 | 79% | 0.068 | 68% | 0.061 | 61% | 0.061 | 61% | 0.057 | 57% | 0.073 | 73% | 0.057 | 57% |
| Azinphos ethyl | 0.063 | 63% | 0.076 | 76% | 0.075 | 75% | 0.068 | 68% | 0.061 | 61% | 0.062 | 62% | 0.068 | 68% | 0.059 | 59% |

Figure 2. FMS Inc. Pressurized Extraction System


## Conclusions

- High Throughput Pesticide Analysis
- 20 minutes per run up to 24 samples per hour
- Up to 192 samples per 8 hour Shift
- Eliminate Manual Steps and Human Error
- Automated Extraction and Cleanup
- Fast. Consistent, Reproducible Results
- Excellent Recoveries of 203 Pesticides

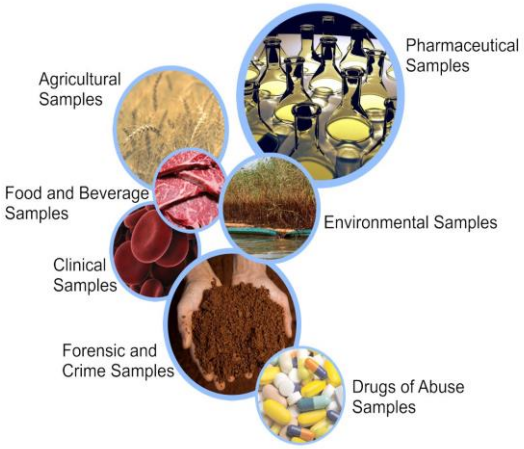


For more information contact FMS:
FMS, Inc.
580 Pleasant Street
Watertown, MA 02472
Phone: (617) 393-2396
Fax: (617) 393-0194
Email: onlineinfo@fms-inc.com
Web site: www.fms-inc.com